Study on Dynamics of Intermittent Vacuum Microwave Drying of Longan

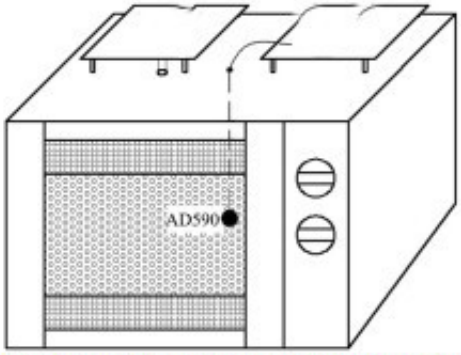

Schematic diagram of microwave drying temperature control system

Abstract: In view of the problem of uneven heating of longan raw materials and excessive drying rate of microwave and local over-focus, the combination of intermittent microwave and variable power microwave is used for vacuum microwave drying of longan, which is analyzed from three aspects: power density, vacuum and load. The change of water ratio and drying rate of longan pulp during vacuum microwave drying process, and establish a thin layer fitting model; color, total phenol content and rehydration as indicators to establish three levels of power density, vacuum and load The orthogonal test optimizes the optimal longan intermittent vacuum microwave drying process.

The experimental results show that the effective diffusion coefficient of longan intermittent vacuum microwave drying equipment increases with the increase of microwave power density, vacuum and load reduction. The two-term model has the best fitting effect in 7 mathematical models. 12 W/g, vacuum degree 90 kPa, loading capacity 100 g is the best drying process for longan intermittent vacuum microwave drying.

Key words: longan microwave drying; intermittent vacuum microwave drying; kinetics; nutritional quality

Longan is a famous tropical and subtropical fruit in China. As the country of origin of longan, China's planting area and output account for 73.6% and 59.7% of the world respectively. The longan pulp is rich in nutrients and active substances such as sugars and polyphenols. As early as in the "Compendium of Materia Medica", there is a record of "benefit is good for longan". Modern medicine has also confirmed that longan has anti-aging and enhancement. Immunity

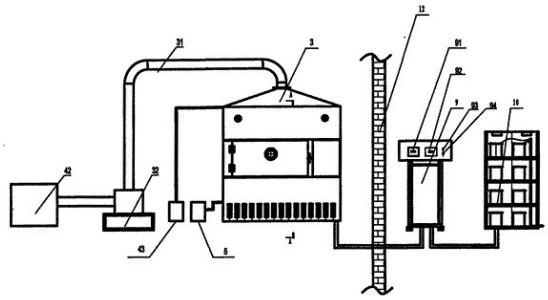

and other effects, is the best for Qi and blood.

However, longan is mature in summer, the harvesting period is short and the flesh is rich in moisture. After harvest, the metabolism is strong, the respiration is strong, and it is easy to rot and deteriorate. Therefore, the dry eye is the main processing product of the longan. The traditional longan dry system mainly has the sun drying method and the fire baking method. The longan dry processed by the two methods has serious nutrient loss of the original fruit, deep color of the pulp, uneven drying in the drying process, and the like, which affects the market sales of the dried longan. . Zhang Xiangyang et al found that vacuum microwave drying can effectively reduce the chemical and enzymatic reactions of the color and flavor of the longan fruit, and better preserve the original flavor of the longan.

Vacuum microwave drying is a new drying technology developed on microwave and vacuum technology. It has the characteristics of high efficiency, low energy consumption, and oxygen isolation. However, microwave heating efficiency is high, drying rate is too fast, and it is easy to produce "hot spots" leading to local over-focus. The phenomenon.

Intermittent microwaves are discontinuous microwave drying with a "slow suture" stage. The intermittent stage can balance the moisture and temperature in the material, increase the drying rate in the next stage, and effectively control the temperature, which is suitable for heat sensitive materials. In the current vacuum microwave drying research, microwaves use constant power, but the moisture content in the drying process is constantly changing, especially the moisture content of the later materials is low. The excessive microwave energy density leads to excessive drying of the materials, which destroys the heat-sensitive nutrients and reduces quality.

In this study, vacuum microwave drying of longan was carried out by means of intermittent microwave and variable power microwave. The changes of water ratio and drying rate of longan pulp during vacuum microwave drying were analyzed from three aspects of power density, vacuum and loading. Establish relevant thin-layer fitting model and optimize the process conditions of longan intermittent vacuum microwave drying, in order to provide theoretical support for the development of new longan dry processing technology with high efficiency and energy saving.