Effects of different drying treatments on total phenol content and antioxidant activity of Portulaca oleracea

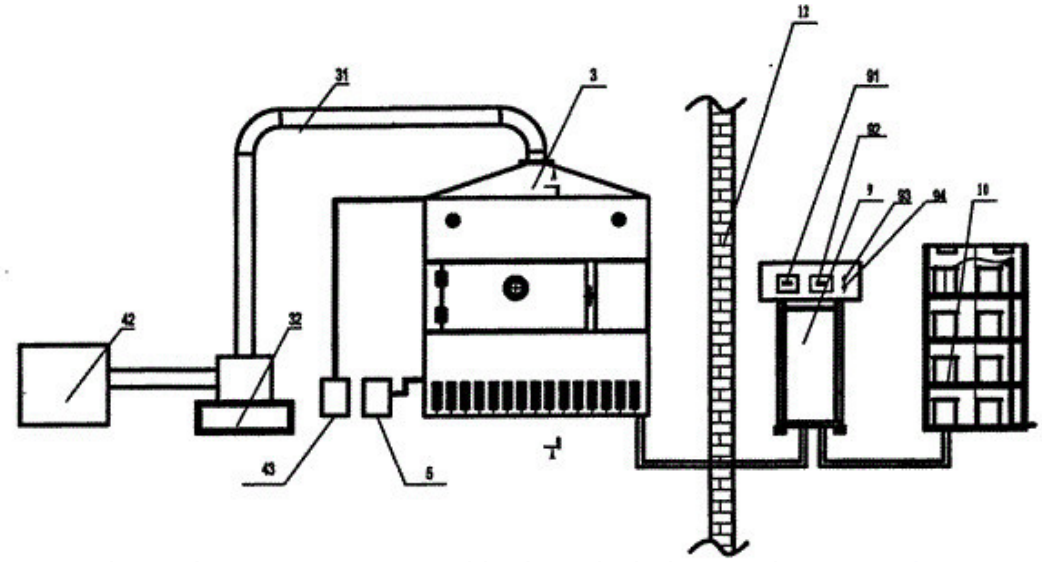

Absrtact: Portulaca oleracea was treated by hot air drying equipment, microwave drying equipment and vacuum freeze drying machine respectively. The total phenol content, total antioxidant capacity, reduction capacity, DPPH scavenging capacity, hydroxyl radical scavenging capacity and superoxide anion radical scavenging capacity of the methanol extract of Portulaca oleracea powder were determined, and different drying recipes were studied. The effects of different methods on total phenol content and antioxidant activity of Portulaca oleracea powder were studied.

Key words: Portulaca oleracea microwave drying; drying method; total phenols; antioxidant activity

Portulaca oleracea is an annual fleshy herb of Portulaca oleracea. As a healthy functional vegetable, Portulaca oleracea is rich in polyphenols, flavonoids and polysaccharides. Besides being edible, it has certain medicinal value. Portulaca oleracea powder can be added to noodles, bread and biscuits as functional ingredients to bring additional nutritional and health benefits to food.

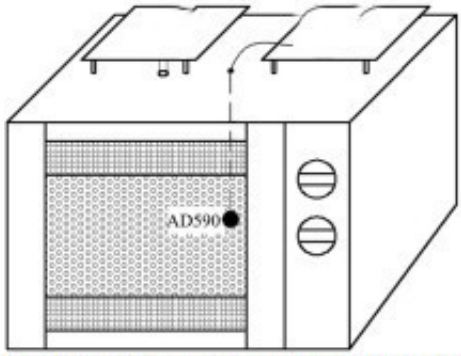

Schematic diagram of microwave drying temperature control system

Among all kinds of drying methods, vacuum freeze-drying method can keep the nutrients and active ingredients of products to the maximum, but the cost is relatively high; microwave drying method is fast, but in some cases it will cause the loss of active ingredients in food; the most widely used hot air drying method is low-cost, but often leads to products. Quality is reduced. Therefore, it is necessary to study the effects of these drying methods on the quality of Portulaca oleracea powder, especially the difference between antioxidant activity and phenolic compounds.

Phenolic compounds widely exist in various fresh fruits and vegetables, and are a kind of natural phytochemicals. The phenolic hydroxyl structure of phenolic compounds in plants can easily be oxidized into quinone structure, which consumes oxygen in the environment. At the same time, phenolic structure has a strong ability to capture free radicals, making phenolic compounds have strong antioxidant and free radical scavenging ability.

Studies have shown that phenolic compounds may have antioxidant, preventive effects on tumors and cardiovascular diseases. At present, there are few studies on phenolic compounds and antioxidant changes in dry powder of Portulaca oleracea. In this study, the total phenolic content and antioxidant capacity of dry powder of Portulaca oleracea produced by different drying methods were compared in order to provide theoretical basis for the actual production and application of dry powder of Portulaca oleracea.